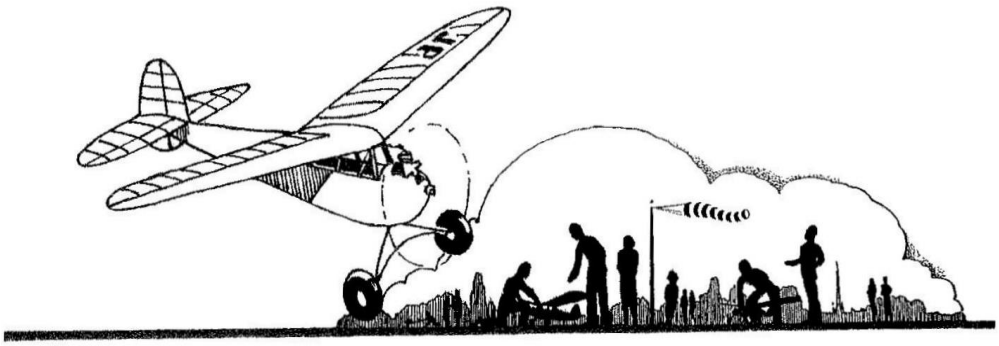

Sticks and Tissue No 111 – February 2016

If you can contribute any articles, wish to make your point of view known etc please send to or phone 01202 625825 JamesIParry@talktalk.net The content does not follow any logical order or set out, it's "as I put it in and receive".

Thanks to Mark Venter back issues are available for download from http://sticksandtissue.yolasite.com/

Writings and opinions expressed are the opinion of the writer but not necessarily the compiler/publisher of Sticks and Tissue.

Photo taken a couple days ago John Bainbridge launching his electric FF Simplex. What grace.

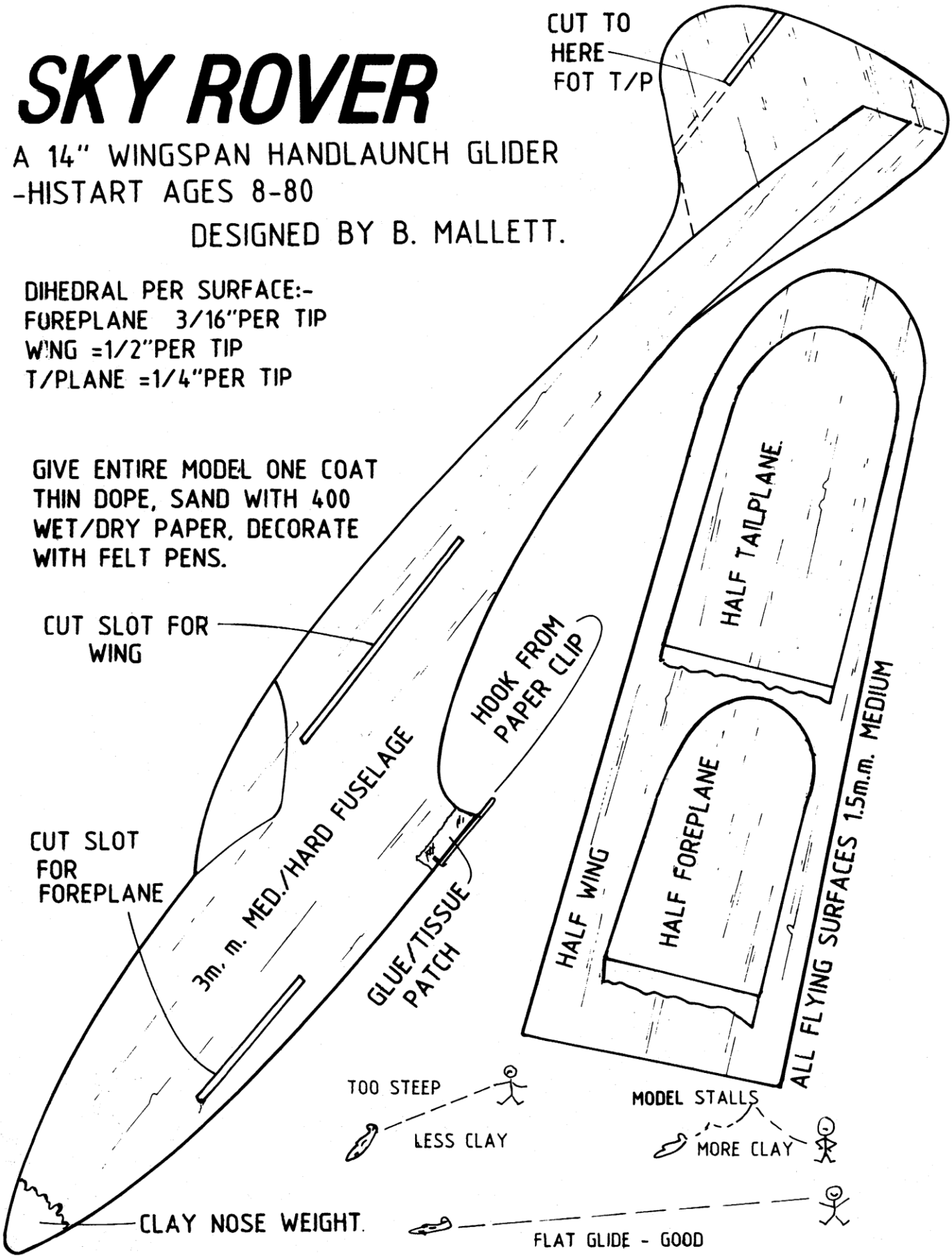

From Aeromodeller September 1995


Anderson
Spitfire
.65
Glow
BC

From John Ralph

I have been enjoying seeing " Stick and Tissue " for a year or so now via BRYAN PASSEY a regular contributor. As you will remember he has passed on to you a couple of features by me. I thought it was about time I started to contribute directly.
This is partly prompted by the news in Tony Dowdeswells magazine " Scale Model International " that I am " DECEASED "!! . See the February issue where he has reproduced an article I wrote some years ago on contra rotating props. Written he said " BY THE LATE JOHN RALPH "!! .
I intend to become more visible again when I think others might be interested in what I have been doing lately or ,more likely what I did during my seventy or so years as an aeromodeller.
Your readers will have seen the piece I did on converting a FF Walrus to RC and might be interested in the similar conversion I did some years ago on a GUILLOWS " Build and Show Catalina " ,

RC. Conversion of Build'n Show CATALINA FOR FLYING OFF WATER.

I have sent you a few photo's of my electric powered RC. CATALINA .It was built from a Guillows kit with modifications to allow flying and landing on water.

Powered by brushless motors turning 6x4 L/R three blade master props. Controls:-"Full House" plus water rudder and operational wing tip floats.

AUW with 8cell NiMh's. (1050's) is 2ib. Hand launch (so far!) to water touchdown duration is about 6min. (Soon to be doubled by fitting Li Po's)

Forward CG (25%) and low "Effective "incidence difference (W/ TP) of only 1.5 deg. Found necessary for stability.

The CATALINA is a great "Looker" and now "Flyer" I need a challenge these days after some 60years of Aeromodelling in the UK. Your Build'n Show kits can form the basis of splendid flying models and I

Guess others may have done conversions. Maybe there are one or two other "Water Conversions "of "The Cat'. If not mine might be a WORLD First!!

The B-17G looks tempting as a "Next Conversion" but I have not seen a kit in any of our local shops. Mind you, I live in a fairly remote area of England. I believe I am the most Westerly member of the British Model Flying Association. Since I live near "Lands End" in the far west of the county of Cornwall.

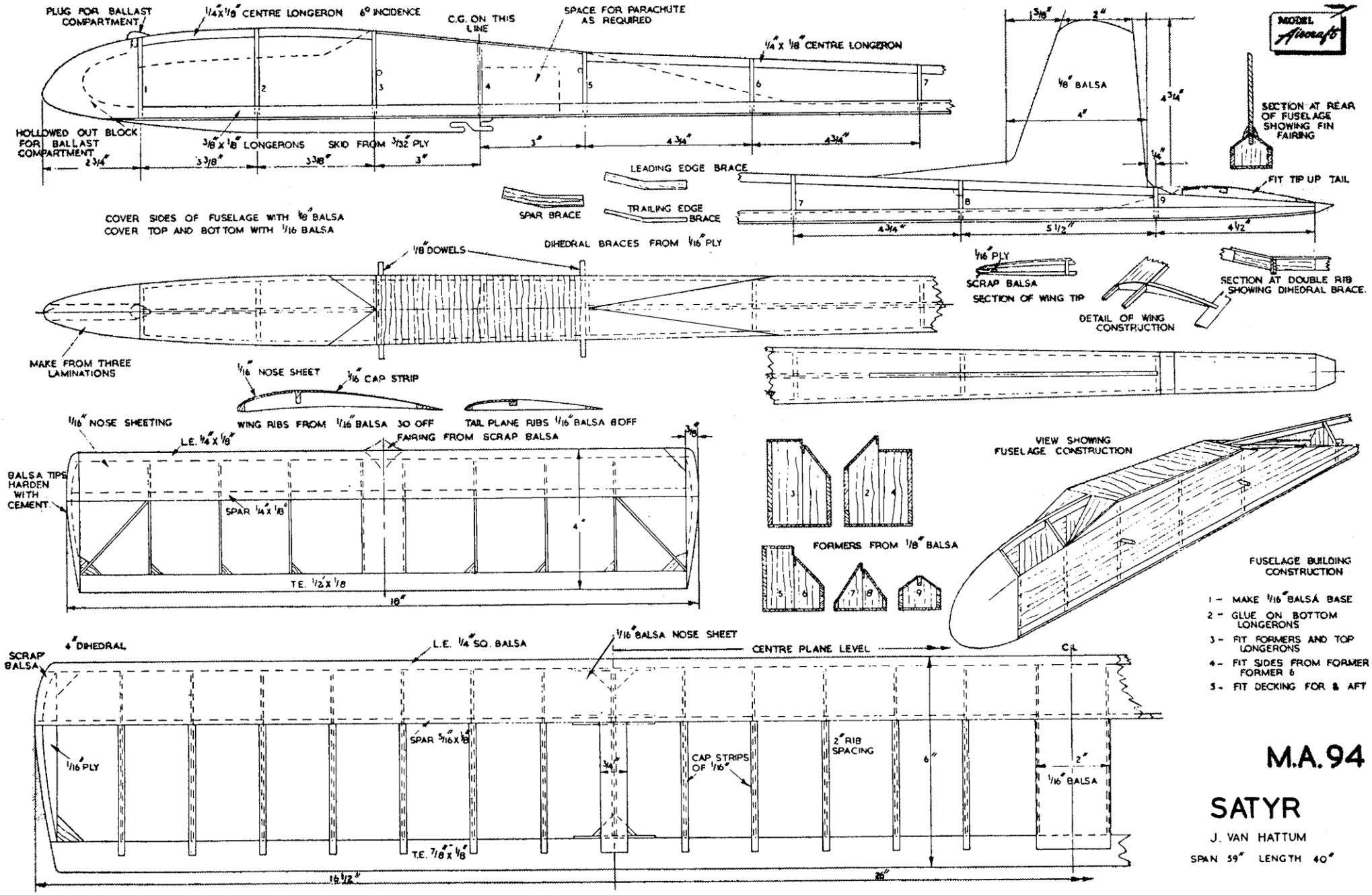
PLUG FOR BALLAST COMPARTMENT
1/4"x1/8" CENTRE LONGERON
6° INCIDENCE
C.G. ON THIS LINE
SPACE FOR PARACHUTE AS REQUIRED
1/4" x 1/8" CENTRE LONGERON
HOLLOWED OUT BLOCK FOR BALLAST COMPARTMENT
3/8" x 1/8" LONGERONS
SKID FROM 3/32" PLY
2 3/4"
3 3/8"
3 3/8"
3"
3"
4 3/4"
4 3/4"
1 3/16"
2"
1/8" BALSA
4"
4 3/4"
1/4"
SECTION AT REAR OF FUSELAGE SHOWING FIN FAIRING
LEADING EDGE BRACE
SPAR BRACE
TRAILING EDGE BRACE
FIT TIP UP TAIL
4 3/4"
5 1/2"
4 1/2"
COVER SIDES OF FUSELAGE WITH 1/8" BALSA
COVER TOP AND BOTTOM WITH 1/16 BALSA
1/8" DOWELS
DIHEDRAL BRACES FROM 1/16" PLY
1/16" PLY
SCRAP BALSA
SECTION OF WING TIP
DETAIL OF WING CONSTRUCTION
SECTION AT DOUBLE RIB SHOWING DIHEDRAL BRACE.
MAKE FROM THREE LAMINATIONS
1/16" NOSE SHEET
1/16" CAP STRIP
WING RIBS FROM 1/16" BALSA 30 OFF
TAIL PLANE RIBS 1/16" BALSA 8 OFF
1/16" NOSE SHEETING
L.E. 1/4" x 1/8"
FAIRING FROM SCRAP BALSA
3/8"
BALSA TIPS HARDEN WITH CEMENT
SPAR 1/4" x 1/8"
4"
T.E. 1/2" x 1/8
18"
FORMERS FROM 1/8" BALSA
VIEW SHOWING FUSELAGE CONSTRUCTION
FUSELAGE BUILDING CONSTRUCTION
1 - MAKE 1/16" BALSA BASE
2 - GLUE ON BOTTOM LONGERONS
3 - FIT FORMERS AND TOP LONGERONS
4 - FIT SIDES FROM FORMER FORMER 6
5 - FIT DECKING FOR & AFT
4° DIHEDRAL
SCRAP BALSA
L.E. 1/4" SQ. BALSA
1/16" BALSA NOSE SHEET
CENTRE PLANE LEVEL
C.L
1/16" PLY
SPAR 5/16" x 1/8"
3/4"
CAP STRIPS OF 1/16"
2" RIB SPACING
6"
2"
1/16" BALSA
T.E. 7/8" x 1/8"
16 1/2"
26"
M.A.94
SATYR
J. VAN HATTUM
SPAN 59" LENGTH 40"

Satyr 59“ span glider Designed by J. Van Hattum from Model Aircraft January 1951

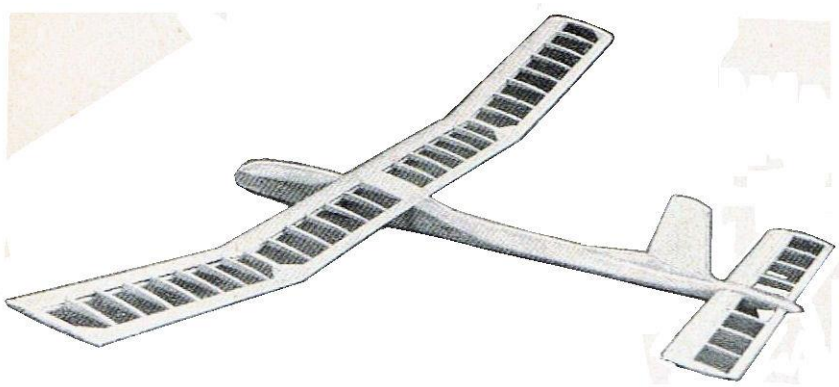

Satyr was designed as a small sailplane model, simple enough to be used as “the beginners first contest model.” yet capable of a useful performance. The small tailplane on a long lever-arm gives excellent stability and the sturdy construction makes the fuselage capable of standing up to any rough treatment—except a careless foot! Of the four prototypes built, three came out below the minimtim F.A.I. weight of 11 ¼ oz.—the heavy one being the designer’s !—so do not spare cement and reinforcement where it serves a good purpose.

Fuselage

First cut plan shape from 1/16 in. sheet, glue longerons along the edges and fit bulkheads and top longerons. Next mount the vertical sides from former 1 to 6. Finally put on the decking, but don’t forget to fix the hardwood dowels while the fuselage is still open. Decking can be left well oversize and trimmed after cement has set. Use plenty of pins to keep sheet in place where it has to be forced into a bend. The nose block is made of three layers of hardwood, total width about 1.2 ins ; the centre one being hollowed out to take trimming ballast . Nose block is glued straight on to former 1. Fit fin, when model is nearly complete so that you can check for true alignment and rigging relative to wing.

Wing

This is quite a simple constant-chord structure and all ribs are 1/16 in. balsa. Build it in three sections which are later joined by the dihedral braces. I found joining very easy when I glued one brace to the spar on the outer Section and the other on the inner section : it gives more support when joining up the sections and less danger of finding insufficient dihedral after cement has set. The constructional method used in building the wing has been described in the May, 1950, issue of Model Aircraft. Briefly, it consists in first cementing main spar and leading edge to the nose sheeting; taking good care that the distance between the two is just right to cover the nose portion of the ribs. When the spars are well in place cement the ribs to the main-spar and a short length of the sheeting. When set, pull the sheeting over the ribs and cement with plenty of pins to keep the parts in position. Take care to line up the tails of the ribs. Vhen this job is done, fit the cap strings—on top if ribs only—leaving the required length to provide anchorage for the trailing edge. Pay good attention to dihedral braces and local reinforcements as many a broken wing results from bad joining where large local stresses are present!

Tailplane and Fin

This is a small version of the wing and one may build this first to become acquainted with the method. The fin is just a balsa-sheet, cut to shape, sanded round the edges and very well cemented to the top of the fuselage. Note strengthening along the base by means of scrap balsa and take care that the fin sits true in relation to the wing. The same applies to the tailplane.

Trimming

To obtain maximum duration a model must be trimmed to fly at the angle of incidence where sinking speed is smallest. This means inevitably that it flies very close to the stalling angle. It is obvious that we must trim the model so that when it stalls owing to a gust, it quickly returns to its “cruising atittude.” When this is not done, the model will carry out a series of stalls, very often becoming more and more violent. This means loss of height and possibly damage. The best way to avoid this is by carrying out the following test procedure: When the model is reasonably well trimmed and flies fairly straight. pull it up on a tow-line of 70-80 ft. Just before release, give a gentle pull on the line to make the model stall. Now carefully observe its behaviour. If it keeps undulating in consecutive stalls, decrease the rigging angle of the wing—or, if you prefer neatness increase that on the tailplane. Also remove a little ballast from the nose. The aim is to get the CG. as far rearward as possibre and the smallest possible difference between the angles of incidence of wing and tailplane. Carry on step by step until the model starts making a shallow dive. It would recover eventually

with sufficient height and this is the point where you have passed the limit of longitudinal stability. So the next thing is to increase the difference between the angles of incidence between wing and tailplane a small amount and the model should now be properly trimmed ; that is, when stalled it should neutralise the stall in not more than three undulations. Do not be satisfied until you have obtained this kind of trim on all your models.
One word of warning : when you approach the critical stage and the model tends to enter the dive, go carefully. When not done in very small steps the model may end in a vertical dive!
I have not given much detail on dethermalisers as these devices need no description. I would suggest starting with a d.t. parachute strapped to the side, but if you like neat work, carefully break a door in the fuselage behind former 4 and fit a compartment in the usual way. Reinforce the sides and corners of the opening. A tip-up tail has not been tried, but the design lends itself very easily for this type of insurance against loss.
If the model happens to fly in a dead straight line, cement a narrow tab to the trailing edge of the fin to make it circle. A model flying straight does not pick up thermals.

Photos from Peter Renggli, Urs Brand and Urs Rindisbacher

Karl Studer

Kurt Glanz


ESSO


1956
Renaissance: 1956 - 2015


HB-695
Ka-8b


BG 74
RIEDSTERN


BE 78
BE 78
7


9


BBC 20 D


44
NE-LA 541 B

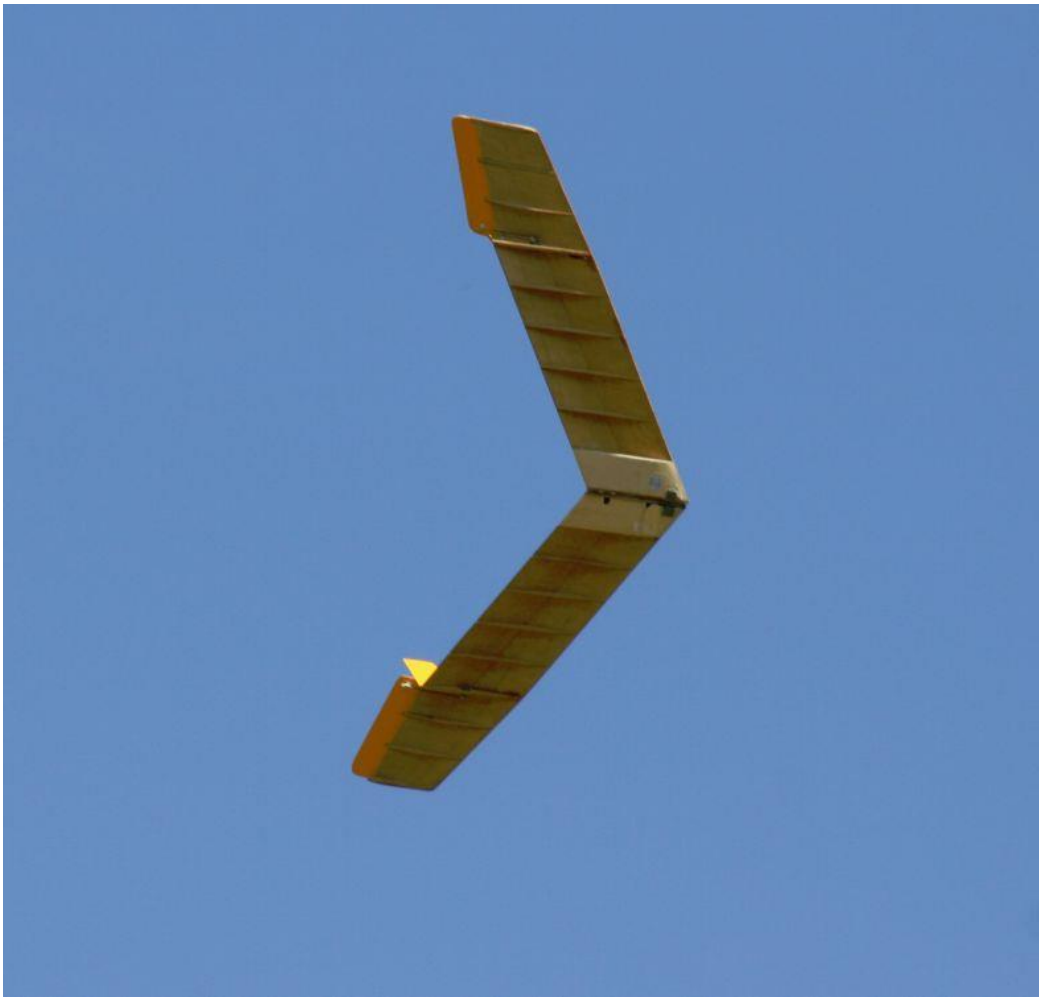


Speedmodell 1939
59


BE - 59

From Bill Wells

During this perpetual wind and rainy period I seem to be making loads on NVA for AM engines!! The only model that I have flown recently developed a radio problem. Two glitches giving full left aileron indicated that a landing ASP would be advantageous. On the approach at about 15 feet a full left aileron glitch occurred and before I could do anything it was in the long grass, mud and sodding wet ground, which a least prevented major damage. Back at the shack I rigged the Rx to the aileron servo with a receiver battery. Sure enough random full left aileron glitches. More expense for a new receiver different transmitter, more winter gloom. I had hoped to send you some new engine pictures but for the time being following issue 110 engine test report here are Holland Hornet (II) pictures.

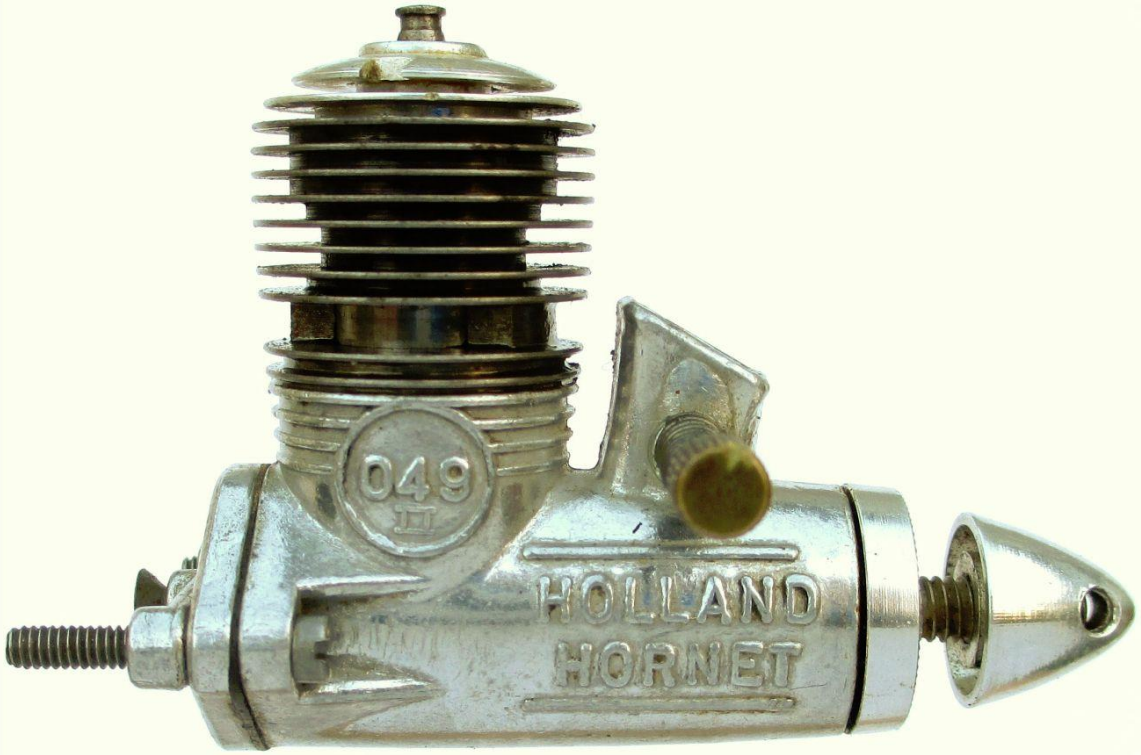

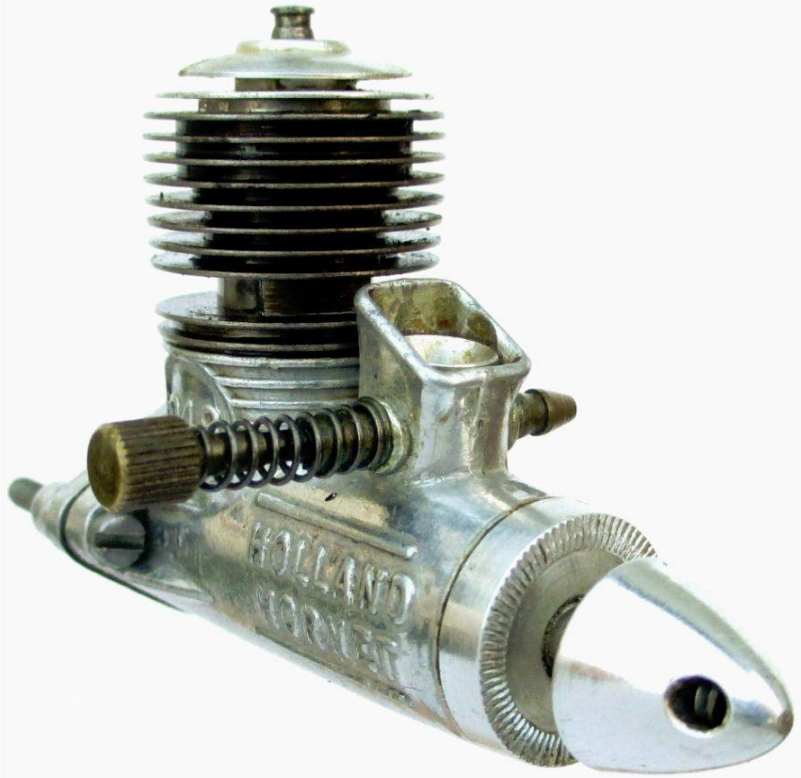

Frog 250 from Model Aircraft February 1951

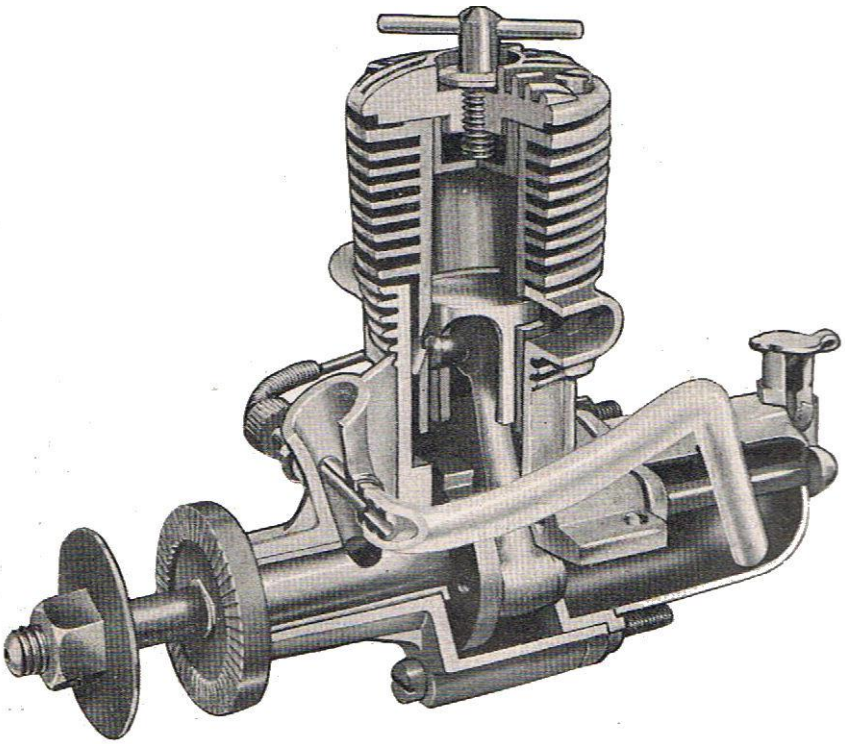

Newest addition to the Frog range of model engines, manufactured by International Model Aircraft Ltd., to be reaching the model shops, is the model "250" compression-ignition engine. Brief details, and the first published photograph of this engine, were given in MODEL AIRCRAFT in July last. The manufacturers state that the 2.49 C.C. "250" was designed primarily to provide a suitable unit for radio-controlled models, and it is not claimed as an ultra high-speed type, of phenomenal output. It should be remembered that, for an R/C model of, say, 400-500 sq. in. wing area and 2-3 lb. weight, an airscrew of reasonably large diameter (i.c., 11 in.) is desirable. Even if this is reduced to 10 in. with a pitch diameter ratio not exceeding 0.5 : 1, no high- speed type 2.5 c.c. engine could reach its peak output under such a load. Thus, no useful purpose is served by aiming at very high peak r.p.m. and output, in the design of an engine intended for service operation at medium speeds. Nevertheless, on test, the Frog showed that it does, in fact, possess sufficient b.h.p. over an adequate r.p.m. range to extend its usefulness beyond R/C and similar free flight types, to power / duration machines and to control-line models.

In appearance, the 250" resembles the well known Frog "500" 5 C.C. glow-plug engine, except, of course, for the cylinder head and the use of two exhaust ports. Like the "500," it is shaft type rotary-valve engine with down-draught carburettor and extended needle-valve control, fuel being drawn from a metal tank fitted to the rear crankcase cover.

The engine is well finished and the clean, turned steel cylinder fins are especially pleasing.

Specification

Type : Single-cylinder, air-cooled, two-cycle, compression-ignition. Rotary-valve induction through hollow crankshaft. Two exhaust ports and four transfer. Flat top piston.

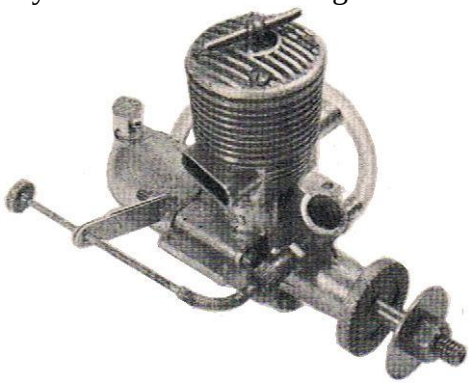

Swept Volume : 2.49 c.c. Bore : 0.580 in. Stroke : 0.575 in.

Compression Ratio : Variable, 10 : 1 to 20 I.

Stroke/Bore Ratio : 0.991 : 1.

Timing : Rotary-valve opens 15 deg. after BDC, closes at TDC.

Exhaust-port opens 64 deg. before BDC, closes 64 deg. after BDC.

Transfer-port opens 48 deg. before BDC, closes 48 deg. after BDC.

Weight : 5 1/2 oz.

General Structural Data : Die-cast aluminium alloy crankcase, rear cover, cylinder-head and fuel tank. Hardened steel cylinder, ground and honed. Meehanite piston and contra-piston machined from solid, ground and lapped. Hardened steel crankshaft ground and lapped, running in phosphor-bronze main bearing. Forged Hiduminium RR.56 alloy connecting-rod. Tubular silver-steel gudgeon-pin, hardened and tempered. Spray-bar type needle-valve assembly with extended flexible control.

Beam or three-point bulkhead mounting. Free-flight fuel tank attached with one screw may be rotated and locked in any position or removed for C/L

Test Engine Data

Total time logged prior to test:

2 hours at 4,000 r.p.m.

Fuel used : Frog “Powa-Mix” with the addition of 2 per cent. amyl-nitrate and 5 per Cent. castor-oil.

Performance

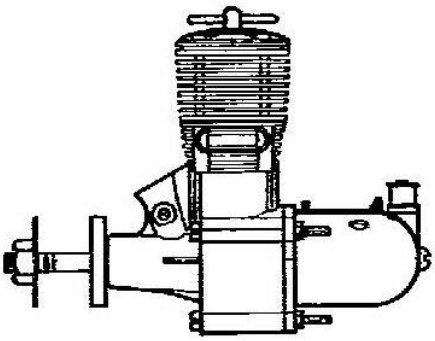

The most noteworthy feature about the performance of the Frog 250—and this applies both to the production unit under test and to a prototype engine tested some twelve months ago—it is ability to hold its r.p.m. under load. That is to say, the usual tendency of diesels, even when well run-in, to lose power as their normal running temperatures are reached is, in the case of the “ 250,” practically non-existent, Based on observation of the many types tested, this feature is believed to be due, primarily, to the cylinder construction used for the Frog, which employs integral turned fins on a steel cylinder and differs from the more common screwed-on finned barrel of aluminium alloy.

Starting the “250” is quite easy and, although priming with a few drops of fuel through the exhaust ports to secure a start from cold is advised in the maker’s instructions, this was not found to be essential during the test, a cold start being quite easily obtained by simply choking the intake for two or three flicks.

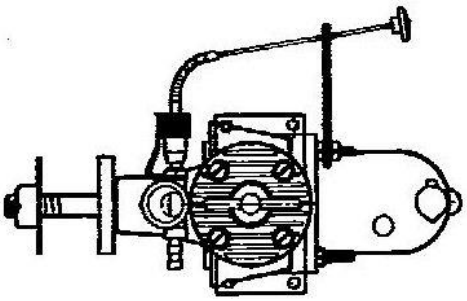

Through an r.p.m. range of 6,000-9,000, the “250” starts very readily both hot and cold. On extra heavy or light loads, hand starting is a little less easy but does not become at all critical unless very small, light propellers, intended to allow the speed to rise about 11,000 r.p.m., are used. Such a speed, of course, is well above that called for in the normal course of operational use. The Frog runs evenly and, with nitrated fuels, is not at all sensitive to needle-valve adjustment.

Above 9,000 r.p.m. it was found that the maximum compression allowed by the compression lever was insufficient to obtain even firing on normal Frog “Powa-Mix” fuel, but this was overcome by the addition of 2 per cent. amyl-nitrate to lower the required compression-ratio and no further trouble was experienced right up to the maximum speed tested. The test engine, incidentally, was fitted with two needle-valve extension clips with the diagonal slots opposed, thus preventing any tendency for the extension to vibrate out and foul the propeller arc.

For the purpose of the b.h.p. tests, the “250” was then run at speeds ranging from 3,500 to 11,500 r.p.m. Good, even torque figures were maintained

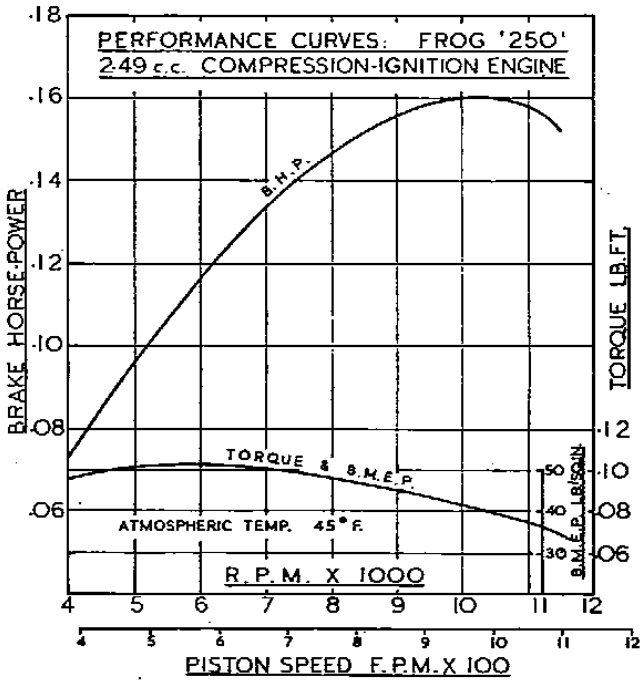

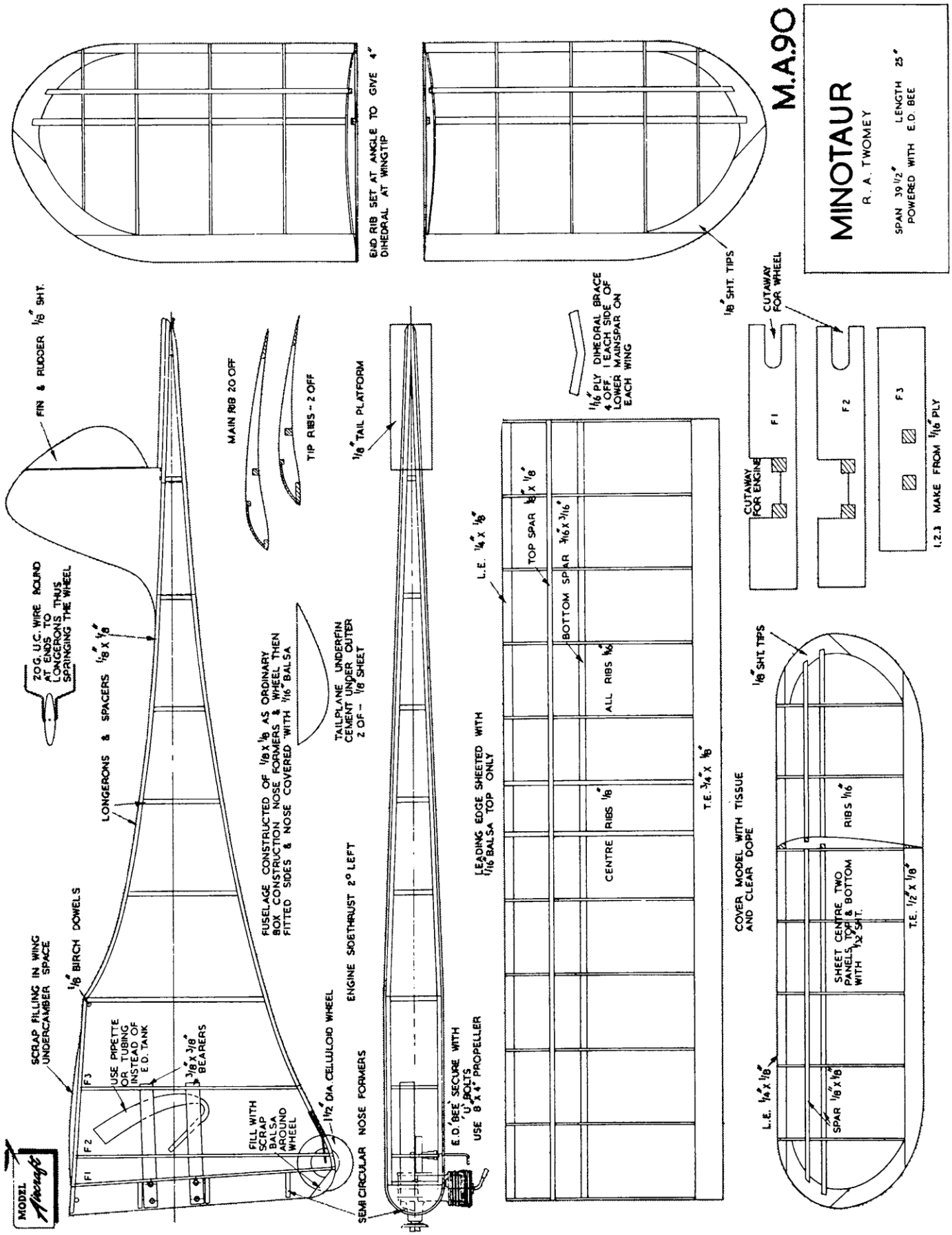
M.A.90
MINOTAUR
R. A. TWOMEY
SPAN 39 1/2" LENGTH 25"
POWERED WITH E.D. BEE
END RIB SET AT ANGLE TO GIVE 4" DIHEDRAL AT WINGTIP
1/8" SHT. TIPS
CUTAWAY FOR WHEEL
1/16" PLY DIHEDRAL BRACE 4 OFF, 1 EACH SIDE OF LOWER MAINSPAR ON EACH WING
FIN & RUDDER 1/8" SHT.
MAIN RIB 20 OFF
TIP RIBS - 2 OFF
1/8" TAIL PLATFORM
20 G. U.C. WIRE ROUND AT ENDS TO LONGERONS THUS SPRINGING THE WHEEL
LONGERONS & SPACERS 1/8" X 1/8"
TAILPLANE UNDERFIN CEMENT UNDER OUTER 2 OFF - 1/8 SHEET
FUSELAGE CONSTRUCTED OF 1/8 X 1/8 AS ORDINARY BOX CONSTRUCTION NOSE FORMERS & WHEEL THEN FITTED SIDES & NOSE COVERED WITH 1/16" BALSA
ENGINE SIDETHRUST 2° LEFT
SCRAP FILLING IN WING UNDERCAMBER SPACE
1/8" BIRCH DOWELS
USE PIPETTE OR TUBING INSTEAD OF E.D. TANK
3/8" X 3/8" BEARERS
FILL WITH SCRAP BALSA AROUND WHEEL
1 1/2" DIA. CELLULOID WHEEL
SEMI CIRCULAR NOSE FORMERS
E.D. BEE SECURE WITH 'U' BOLTS USE 8" X 4" PROPELLER
F1
F2
F3
L.E. 1/4" X 1/8"
TOP SPAR 1/8" X 1/8"
BOTTOM SPAR 3/16" X 3/16"
ALL RIBS 1/16"
CENTRE RIBS 1/8"
T.E. 3/4" X 1/8"
LEADING EDGE SHEETED WITH 1/16" BALSA TOP ONLY
COVER MODEL WITH TISSUE AND CLEAR DOPE
1/8" SHT. TIPS
RIBS 1/16"
SHEET CENTRE TWO PANELS TOP & BOTTOM WITH 1/32 SHT.
T.E. 1/2" X 1/8"
L.E. 1/4" X 1/8"
SPAR 1/8" X 1/8"
CUTAWAY FOR ENGINE
1, 2, 3 MAKE FROM 1/16" PLY
MODEL Aircraft

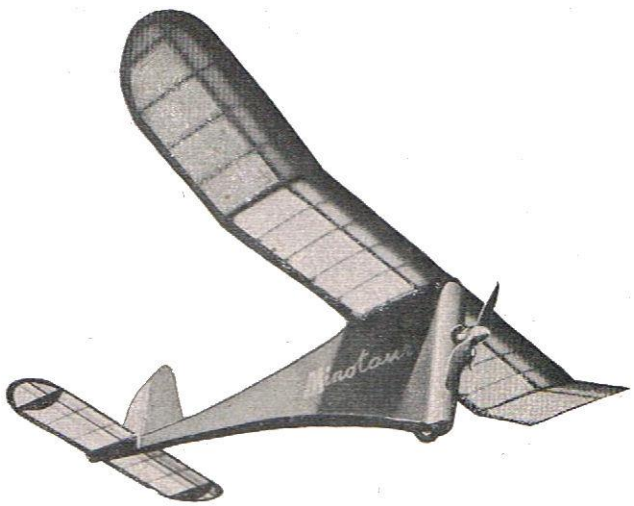

Minotaur a 39 ½“ power contest model By R. A. Twomey from Model Aircraft February 1951

The original “Minotaur,” so the dictionary tells us, was a “fabulous monster” of ancient Greek times. This model being both noisy and monstrous (in shape though not in size), though far from fabulous; the name seemed appropriate.

This particular Minotaur, unlike the original Greek beast, was designed as a contest power model for the popular E.D. Bee 1 c.c. diesel. It has proved satisfactory in every way and offers a change as well as a

challenge to the larger model. The need for a cumbersome undercarriage is eliminated, and props are saved, by fairing the sprung mono-wheel into the fuselage. The tailplane underfitis give a firm three-point stance, and on its first trials the Minotaur left the deck with an ease that startled even the poor designer.

The climb is near-vcrtiral, but it is on the glide that this model really scores, thanks to the wing section, which is from the well-known Swedish Sigiard Isacson series. Ratios of 7 and 8: 1 in still air are common, and it was not long before the Minuteur had pushed the Ampleforth College club power duration record successively to 7 min. 43 sec and10 min. 31 sec, o.o.s. Later the ratio record was also smashed, when the model disappeared into cloud after 9 min. 15 sec. on a 15 sec. engine run. (Ratio 37 : 1). Needless to say, the occasion was a trimming flight prior to a national competition! The Minotaur was not recovered in time for the event, but when it was found it was discovered to have stayed in the air for 1 1/4 hours. (Work that ratio out!) In addition it had established a new club distance record of 11.7 miles.

Fuselage

First build the two slabsides of 1/8in. strip on the plan; then join them with ply formers F1, F2 and F3; and add the remaining spacers. Next drill bolt holes in bearers and cement them firmly in place. Add bolts, and at this point bind undercarriage also in place. Now sheet the fuselage sides with 1/16 in. sheet, add semi-circular nose formers, bend 1/16in. sheet carefully around nose and cement firmly. When you are actually fitting the engine, just cut away the necessary amount of sheeting to allow you to bolt the engine in place. It is recommended that you use “U “-bolts, if these are available, as they greatly simplify mounting of the engine. The “Bee” is mounted sidewinder fashion, with the “pot “on the port side. Before covering the fuselage, add the 1/8 in. sheet fin, noting that its base goes down level with the bottom longerons of the fuselage.

Wings .

The wings are quite straightforward. When built they are all in one piece but construction is best done in three pieces—the centre section and the two dihedralled tips. The three are then joined and braced with 1/16in. ply as shown.

Tail

The tailplane is quite orthodox and it is intended to be strong. You are not advised to deviate from the plan, by building it lighter, for two good reasons:

(1) In take-off position the tailplane supports a lot of the weight of the model.

(2) If the model trips on landing, as it may easily do on rough ground, a lighter and flimsier tailplane would crack due to the upward jolt of the rudder.

Dethermaliser

A dethermaliser is a useflul addition to the Mynotaur whose layout is ideal for the rip-up tailplane type, operated either by a timer or a simple fuse. In the writer’s opinion the tip-up-tail is by far the most effective method yet devised. The parachute type is not recommended.

Trim

As world record holder Henri Varaehe once said: “The first flight of a power model may also be its last “— so go easy on trimming. The Minotaur climbs either straight or in a wide left circle, and glides to the right, therefore, use right rudder and compensate with generous left sidethrust.

A few photos taken last Monday at DMFG

To bulk out this issue here’s a few photos.

John Taylor’s Apex from the 1980’s and own design Yellowfin

John’s Simplex

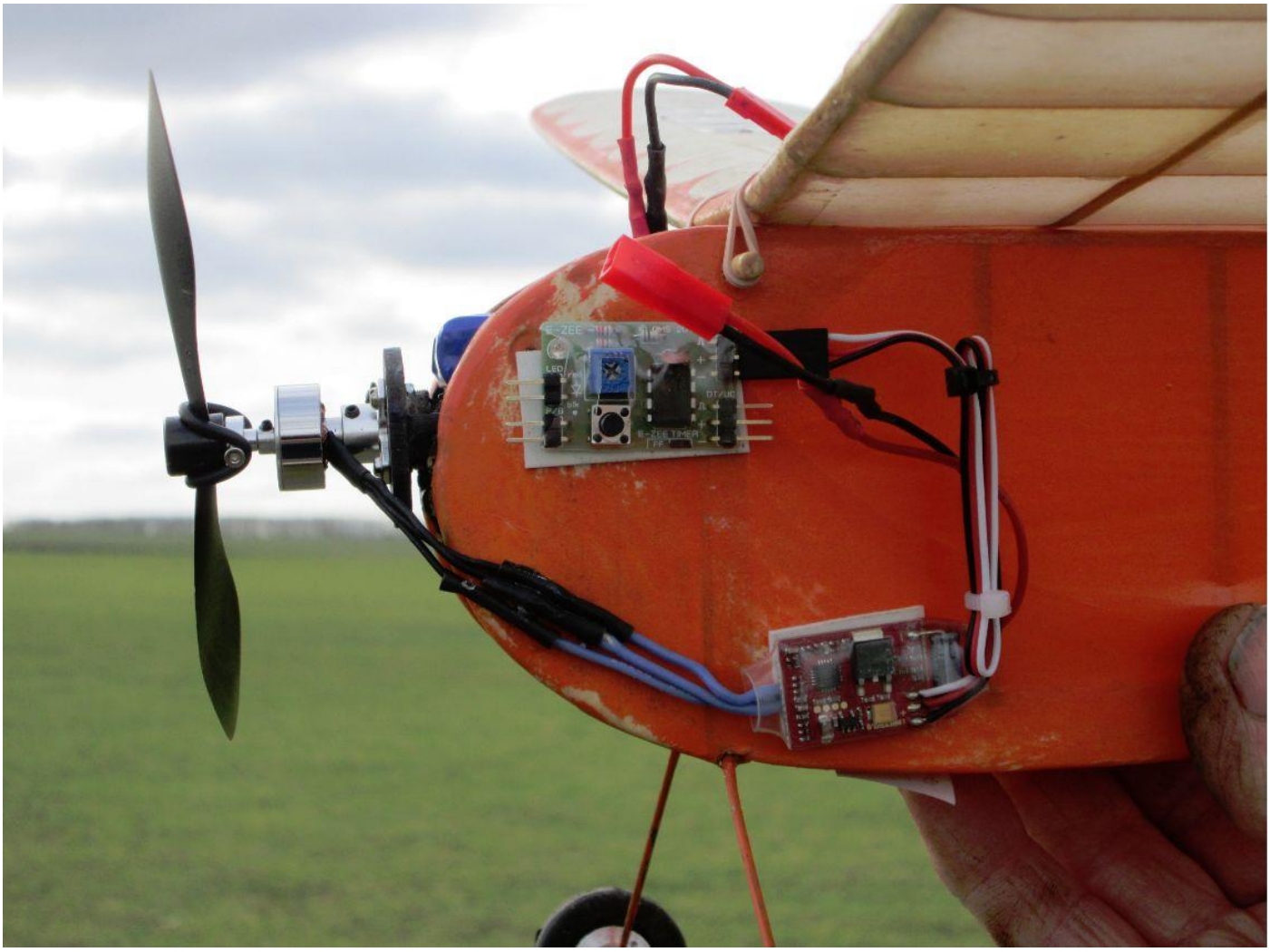

Close up of the Simplex showing the 35W Baby motor from BRC / Robotbirds, ESC and E-ZEE timer. The timer is fantastic above only wired up for motor run at present but has pins for DT and buzzer. John flew it many times with 10 second motor run that powers down after about 8 seconds which prevents the stall if going up at a steep angle. Just press button, launch, collect, press button launch so easy. Everything is outside as was cobbled together from IC power just to test and see how all performed. The timers are available from Dens Models 01983 294182 or http://www.densmodelsupplies.co.uk/index.php?c=e-zee_timers

John proud with Simplex and Polaris

Another launch with Brian Beacham, and glider, cheering on. What a fatastic launch poise.

John Taylor's Veron Skyscooter electric powered on the way up

Simplex ROG ing


B.M.P.
3.5 CC
BC

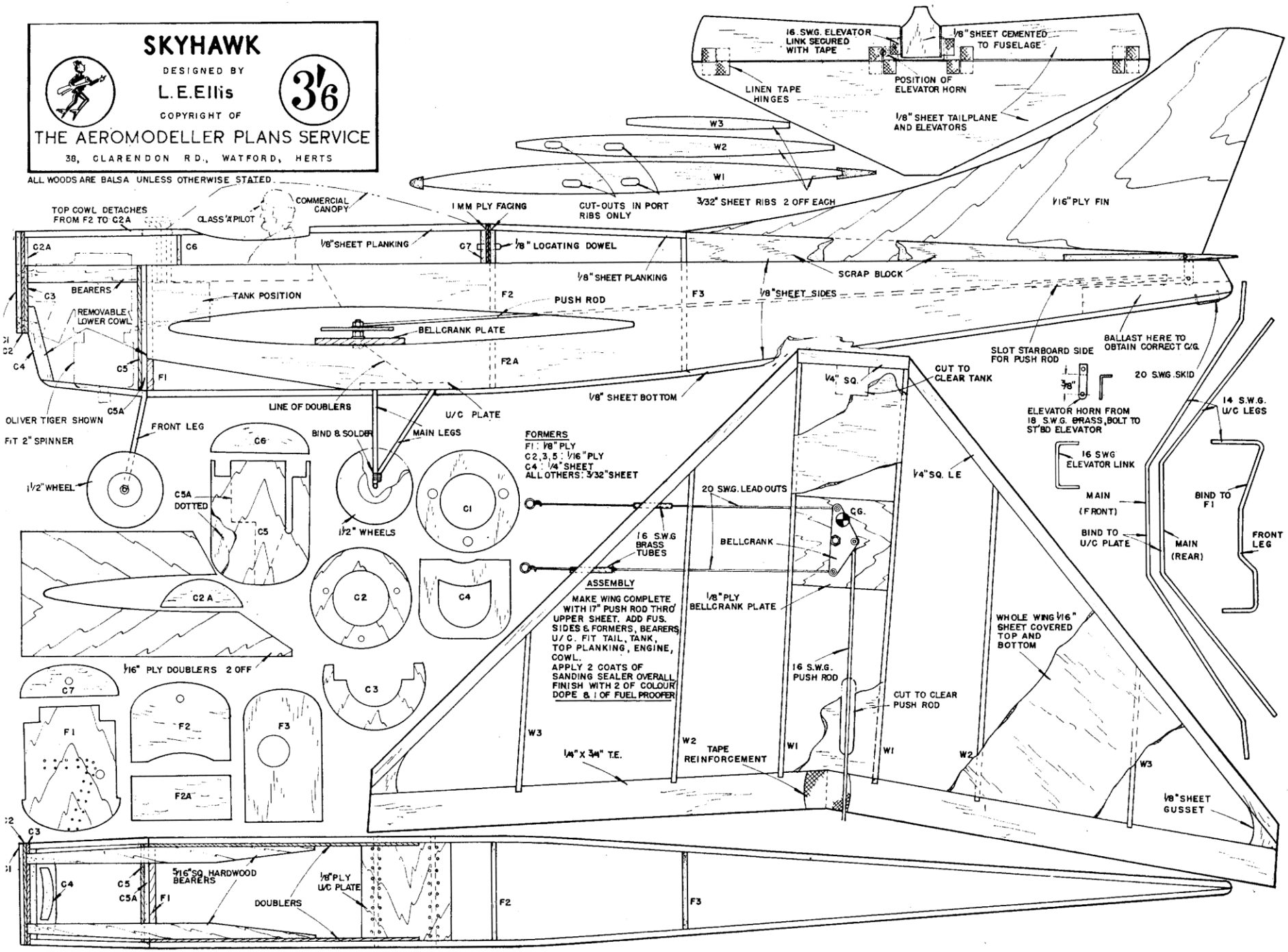
SKYHAWK
DESIGNED BY
L.E.Ellis
3/6
COPYRIGHT OF
THE AEROMODELLER PLANS SERVICE
38, CLARENDON RD., WATFORD, HERTS
ALL WOODS ARE BALSA UNLESS OTHERWISE STATED.
16 S.W.G. ELEVATOR LINK SECURED WITH TAPE
1/8" SHEET CEMENTED TO FUSELAGE
LINEN TAPE HINGES
POSITION OF ELEVATOR HORN
1/8" SHEET TAILPLANE AND ELEVATORS
W3
W2
W1
CUT-OUTS IN PORT RIBS ONLY
3/32" SHEET RIBS 2 OFF EACH
1/16" PLY FIN
TOP COWL DETACHES FROM F2 TO C2A
GLASS PILOT
COMMERCIAL CANOPY
1 MM PLY FACING
C2A
C6
1/8" SHEET PLANKING
C7
1/8" LOCATING DOWEL
1/8" SHEET PLANKING
SCRAP BLOCK
C3
BEARERS
TANK POSITION
F2
PUSH ROD
F3
1/8" SHEET SIDES
REMOVABLE LOWER COWL
BELLCRANK PLATE
C1
C2
C4
C5
F1
F2A
SLOT STARBOARD SIDE FOR PUSH ROD
BALLAST HERE TO OBTAIN CORRECT C/G.
20 S.W.G. SKID
1/4" SQ.
CUT TO CLEAR TANK
3/8"
ELEVATOR HORN FROM 18 S.W.G. BRASS, BOLT TO ST'BD ELEVATOR
14 S.W.G. U/C LEGS
C5A
1/8" SHEET BOTTOM
LINE OF DOUBLERS
U/C PLATE
OLIVER TIGER SHOWN
FIT 2" SPINNER
FRONT LEG
BIND & SOLDER
MAIN LEGS
FORMERS
F1 : 1/8" PLY
C2,3,5 : 1/16" PLY
C4 : 1/4" SHEET
ALL OTHERS: 3/32" SHEET
16 SWG ELEVATOR LINK
1 1/2" WHEEL
C6
C5A DOTTED
C5
1 1/2" WHEELS
C1
20 S.W.G. LEAD OUTS
1/4" SQ. LE
CG.
MAIN (FRONT)
BIND TO F1
16 S.W.G BRASS TUBES
BELLCRANK
BIND TO U/C PLATE
MAIN (REAR)
FRONT LEG
C2A
C2
C4
ASSEMBLY
MAKE WING COMPLETE WITH 17" PUSH ROD THRO' UPPER SHEET. ADD FUS. SIDES & FORMERS, BEARERS, U/C. FIT TAIL, TANK, TOP PLANKING, ENGINE, COWL.
APPLY 2 COATS OF SANDING SEALER OVERALL. FINISH WITH 2 OF COLOUR DOPE & 1 OF FUEL PROOFER
1/8" PLY BELLCRANK PLATE
WHOLE WING 1/16" SHEET COVERED TOP AND BOTTOM
1/16" PLY DOUBLERS 2 OFF
C7
C3
16 S.W.G. PUSH ROD
CUT TO CLEAR PUSH ROD
F1
F2
F3
W3
W2
W1
1/4" x 3/4" T.E.
TAPE REINFORCEMENT
W1
W2
W3
1/8" SHEET GUSSET
F2A
C3
C4
C5
C5A
F1
5/16" SQ. HARDWOOD BEARERS
DOUBLERS
1/8" PLY U/C PLATE
F2
F3

Skyhawk Jet lines provide a new look for Class A Team Racing and sport flying by Laurie Ellis Aero Modeller December 1957. 18“ span Class A, 2.5 cc

Laurie Ellis enters the team race and sport flying field with this unusual design which has already hit the 85 m.p.h. mark in prototype form. Trike u/c, long fuselage and jet lines make it a real out-of-the-rut model, which will appeal to those who are looking for something quick to build with a robust crash-proof Structure.

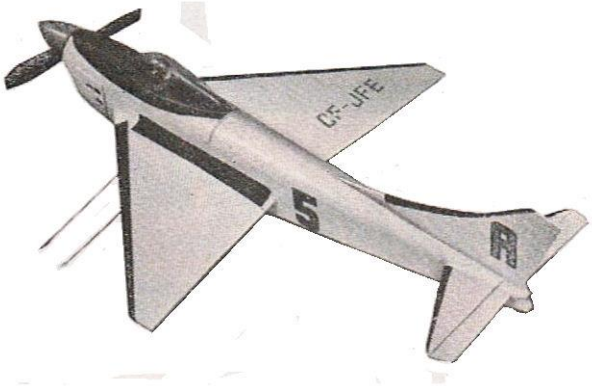

Anyone who has built a few powered models will have no difficulty with the construction and the model can be completed in about twenty hours of spare time. The wing must be built first. Lay out the leading and trailing edge pieces flat on the table and cement together. Cement in the wing tip fillets. Do not bevel the trailing edge before assembly. When dry, raise the wing outline from the board and slide small pieces of 3/8in. balsa underneath at regular intervals. This raises the wingframe enough to allow clearance of the wing ribs. Cement all ribs in place and cover entire surface with 1/16 in. sheet. The centre section is covered with the grain horizontal, the main body of the wing is covered with the grain running parallel with the leading edge. Note that the sheeting butts against the rear of the L.E. and the front of the T.E. When dry remove from plan. Make up bell-crank unit and fit to 1/8in. ply. Cement unit in place. Drill L.E. for brass tube line guides. Install lead our wires. Cover surface of wing with 1/16 in. sheet. Cover Centre section as well then cut out an elongated hole to allow access to bell-crank and installation of push rod. The fin is made out of 1/16in. ply. Sand carefully, give two coats of sealer, then dope with two or three coats, sanding between each coat.

Make the tailplane from 1/8in. hard sheet. Sand to aerofoil shape. Install elevators with cloth hinges. Cement 18 S.W.G. elevator link in place and secure with small pieces of gauze. Bolt elevator horn in place on under side of right elevator. Cover stabiliser and elevators with lightweight paper and give several coats of dope.

Cut out fuselage sides from medium hard 1/8 in. Sheet balsa. Mark position of formera. Cement doublers in place and cement hardwood engine bearers in place, spaced according to your engine. These should be secured with small brads. Sew front landing gear leg to F.1. Slide fuselage aides on to the wing from each side. Cement F.1 and hold in position with elastic bands. Cement in F.2 and F.2A. Draw rear of fuselage together and cement. Ccment F.3 in position. Now install pushrod. Cement tailplane in position ensuring that the elevators are neutral when the bell-crank is central. Cement fin position and plank upper part of fuselage from F.2 to rear. Make up main undercart unit and sew to 1/8 in. ply. Cement unit in position and don’t be afraid to use lots of cement.

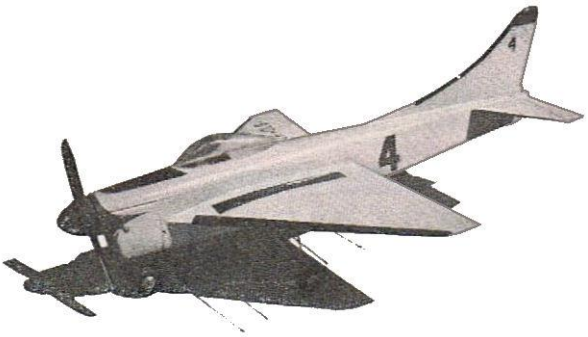

Make up the cowl at this stage, before the fuselage is finished. By mcans of small wood screws, secure C.1 in place on front of engine bearers. Cement a 1 mm. ply face to the front of the upper part of F.2, also cement a 1 min. ply face to the rear face of C.7. Pin in position and drill for two small lengths of 1/8 in. Dowel cemented on C.7. Locate C.6 and hold in position with pins. Now plank upper part of cowl with 1/8 in. strips. When dry, unscrew small screws at front and cowl will slide off. Remove needle valve and contra-piston lever from engine and install in position. Be sure to allow sufficient clearance for prop and spinner in front of C.l unit. Reinstall upper cowl. By means of s small wood screw secure C.3 in position. Slide C.5 unit in position against front of F.1. Plank in lower part of cowl. Sand down complete unit while still in position. Remove cowling and give two coats of sealer, cover with lightweight paper and give three or four costs of dope.

Now install tank and cover underside of fuselage. Give all wood surfaces two coats of sealer and cover with lightweight paper. Apply three or four coats of dope and then colour to suis individual tastes. The original model is coloured all white with black trim. This gives s very striking finish even if white is an awful colour to apply.

Showscene from Dave Bishop.

Well what a sad piece of that news happened recently was when I heard on the BBC's Radio 4 that a very dear friend and world class flyer, had gone up to the big flying field in the sky at the age of 97. Captain Eric "Winkle" Brown passed away after a short illness on Sunday February 21. I knew him for such a long time and enjoyed listening to his various talks in which he held his audiences almost spellbound with his multitude of flying memories. He was a very nice person with absolutely no swagger whatsoever and always greeted me with a "hullo Dave", whenever we met. I don't know how many times I "miked" him with a radio microphone but I shall never forget his straight ramrod back as he stood giving each of his stories to many clubs and associations. Another cracking night I remember especially was when he came to the Caterham clubs evening at Godstone on April 20 last year and held his audience spellbound for over an hour, talking about so many aeroplanes that he had air tested all over the world. His face lit up when he was introduced to everyone by chairman James Gordon when his favourite tune of "Stardust" played by Artie Shaw was being relayed on my PA system at that event. He was at the Rod Dene's, Shoreham airshow on August 22 last year as a guest, meeting many of his past associates. Just before Christmas my wife Jan and I met him and his partner Jean, when we were all having lunch at the Haskins Garden centre at Snowhill near to Crawley. Both Eric and the late Lady Barnato Walker (and so many other flying greats) were such lovely people that I am proud to say were through and through British types and we will always have such warm memories in the flying of so many aeroplanes and what they did for all of us.

I did the annual trek to the huge K2 indoor arena at Crawley on February 7 for the BMFA and Crawley & District Model Aircraft Club event there and met in the car park Tim Mountain a great pal from many years ago armed with a box of models that he flew inside later. Again it was nice to be greeted at the door by the usual pair of John and Graham with the news that the price of admission had gone up as had the rent of the place for that day. I think that the price of half a packet of cigarettes is peanuts bearing in mind that you meet all of you friends from way back for the usual catch-up chat with (once again) the popular editor of Aeromodeller monthly, Andrew Boddington. Such a nice gentleman and a model of his late father David. For the first time the well known trader Flight Hook's John and Pauline, noted by their absence but there was another excellent replacement who everyone can see him if they go to the three Modelair events at Old Warden this year again organised by Ken and Sheila Sheppard. The team of organisers work hard to make that K2 day so good and this year there was an added extra for the indoor radio controlled aeroplanes. They carried on radio controlling their models after the days "normal flying" had been completed and awards presented to the winners and the very god raffle drawn. Static Judging was by the usual three-some on Don Coe, James Gordon and Peter Royalle as had the technical awards being printed out by the I.T. expert and engineer Keith Wright. The gentleman on the PA was very pleasant and helpful as indeed was the lady selling tickets for the raffle. It was nice to have a chat with "Mr and Mrs Wot 4" Chris and Jane Foss. They were accompanied by Ricky Shaw who to me has never changed in appearance and only seems to improve with age. I remember presenting the foursome of Chris, Ricky, Ken Binks and Phil Ramsey at many shows all over the place in their yellow gear supplied by the late Stuart Uwins of Skyleader. Show stoppers they were and flew with such discipline some 30 plus years ago. Their team of "Skymasters" showed such formation flying that was the envy of so many new (and old) aeromodellers. Without a doubt that quartet were the "starts of the day" anywhere that they appeared. One of their best performances (and much appreciated by an enormous crowd) was at the annual Sandown Park symposium where the "Yellow Coats" held sway. Also at the K2 was the adorable couple of Dibs and Vibes Masters, there as usual with their fully detailed models flown beautifully for all to see and enjoy. The lady had once again kindly supplied the usual box of super chocolates that were being offered to everyone. It was good to see the "Geoff Goldsmith Surrey lot" again as they enjoy all of the "crack" with so many associates. The annual February K2 event wouldn't

be the same without them. Summing up it was a great day out once again and well done the whole team that makes it all go with a friendly welcoming swing.

If you S&T readers do happen to find the time (and a special welcome all of the "Broken Wings" team from Belgium) to visit any of the UK events featured in the following list that I will be presenting this year please, remember that all of them have full camping facilities, and most of them have after the show, evening flying. Also there will be several traders at these shows and events that include the ever helpful Leon Cole and family of Belair Vintage Models at Old Warden. The "full English breakfast" restaurant and book shop at O.W are great attractions and of course there is usually over 40 of the world's oldest pristine full size aeroplanes there in the fantastic museum. The Flight line directors that run the radio controlled flight line nowadays, are the most polite and extremely helpful group of experienced flyers that you could ever wish to meet. As shown in the following list, the September Old Warden has a special Vic Smeed Memorial day being run in September, so the list of his kitted models from Leon is almost endless. Details of Vic's kits can be received by ringing 01362 668658 or if you do have a computer you can obtain a free catalogue on line at; www.belairkits.com

Some "not to be missed" events this 2016 year.

May 14 - 15 = Old Warden Mayfly = featuring the Ron Moulton Memorial trophy along with SAM35 and the Ebenezer event being held.

June 4 - 5 = Long Marston Airshow this is a Traplet Publications sponsored event

June 17 - 18 - 19 = Weston Park annual family show. Everyone (well. many of them) from all over the world will be there.

June 25 - 26 = Wings & Wheels show at North Weald aerodrome. Jane Stephenson bows out but I have been assured that the show will continue. (No evening flying but great "live entertainment".)

July 23 = 24 = Old Warden Scale weekend.

September 24 - 25 = Old Warden "Festival of Flight" the last of the 3 Modelair events with the special Vic Smeed Memorial day plus anything and everything Vintage.

Pictures Attached.

German scale Albatross biplane seen at the Sevenoaks club field.

A great "Biggy" at Old Warden tailless with Laser engine man Neil Tidy- helped by Colin and Peter Royalle.

Old Warden and a flyer with a brace of "pop bangers".

One of the best scale modellers ever with his latest model at Old Warden .

This person was seen at Old Warden with a super glider that flew like a dream.

This super electric R/C Short Stirling at 118" wingspan and 4 out runners with 3 bladed props seen at Old Warden built by Robin Fowler and fully featured in R/C Model world magazine.

Much missed in the UK show circuit and now in the USA is Ali Machinchy Junior with his son Xavier. Both are such gifted flyers at stopping any show with their aerobatic flying that they appear at.

The late Captain Eric "Winkle" Brown seen (centre) with the Caterham clubs chairman James Gordon (left) and right Andy Kenning the clubs treasurer on April 20 2015.

Judge line up at the K2 indoor BMFA/ Crawley event on Feb 7 -2016. Helper - Brian Rice, Peter Royalle, James Gordon and Don Coe.

Visitors at the K2 indoor event at Crawley on Feb 7 2016 - Ricky Shaw with Jane and Chris Foss.

This tiny 9 inch wingspan biplane was a radio controlled aeroplane at the K2. The owner is a brilliant (and a very nice) radio engineer and he builds all the radio himself.

The regular "gatekeepers" at the K2 indoor event at Crawley are Grahame and John.

A superbly built German Tri-Seaplane at the K2 indoor event at Crawley on Feb 7 -2016.

Regular and very popular flying visitors at the indoor event at the K2 at Crawley are Dibs and Vibes Masters.

A lovely family group seen enjoying themselves the K2 Indoor event at Crawley on Feb 7 - 2016.

The super group from Surrey led by Geoff Goldsmith seen at the K2 Indoor event at Crawley on Feb 7 - 2016.

Two gentlemen rubber free flighters seen at the Crawley indoor event of Feb 7 - 2016.

Belgian visitors of the "Broken Wings club" seen at the Old Hay show last year. They are readers of Sticks & Tissue.

Some of the Belgian "Broken Wings club" visitors after arriving in their Shorts Skyvan seen at the Old Hay show last year.

The Shorts Skyvan of the Belgian "Broken Wings club" gave an impressive flying display in the full size part of the show at Old Hay last year. The owner owns three such aeroplanes.

From Martin Dilly

Crowd On & Risk It is the story of one of Britain's oldest and most successful model flying clubs, Croydon & District Model Aeronautical Club, founded in 1936 and not to be confused with Croydon Airport MFC, established some forty years later in the mid-1970s. Different club, different name.

Some years ago the late Keith Miller compiled a history of the club from 1936-1960, and now Martin Dilly has produced an extended 73 page edition, covering the Chobham Common and Bassingbourn years and bringing the story more up-to-date. As well as Keith's photographs there are many additional ones that convey the atmosphere of free-flight when entries of well over a hundred were common in club-run contests, along with the memories of many of Croydon's past and present members.

24 Croydon members have represented Britain in all the free-flight classes plus a few CL and RC ones, a unique record, and they have had no less than 52 plans published in the magazines over the years. The club has also launched a number of people into some pretty serious aerospace careers, ranging from movie stunt flying and commanding the Battle of Britain Memorial Flight to pioneering supersonic wind tunnel techniques that led to Concorde and the Tornado.

Crowd On & Risk It is available from Martin Dilly (martindilly20@gmail.com) or phone/fax at +44 (0)208 777 5533 or 20, Links Road, West Wickham, Kent BR4 0QW at just £8.00, UK cheques or PayPal

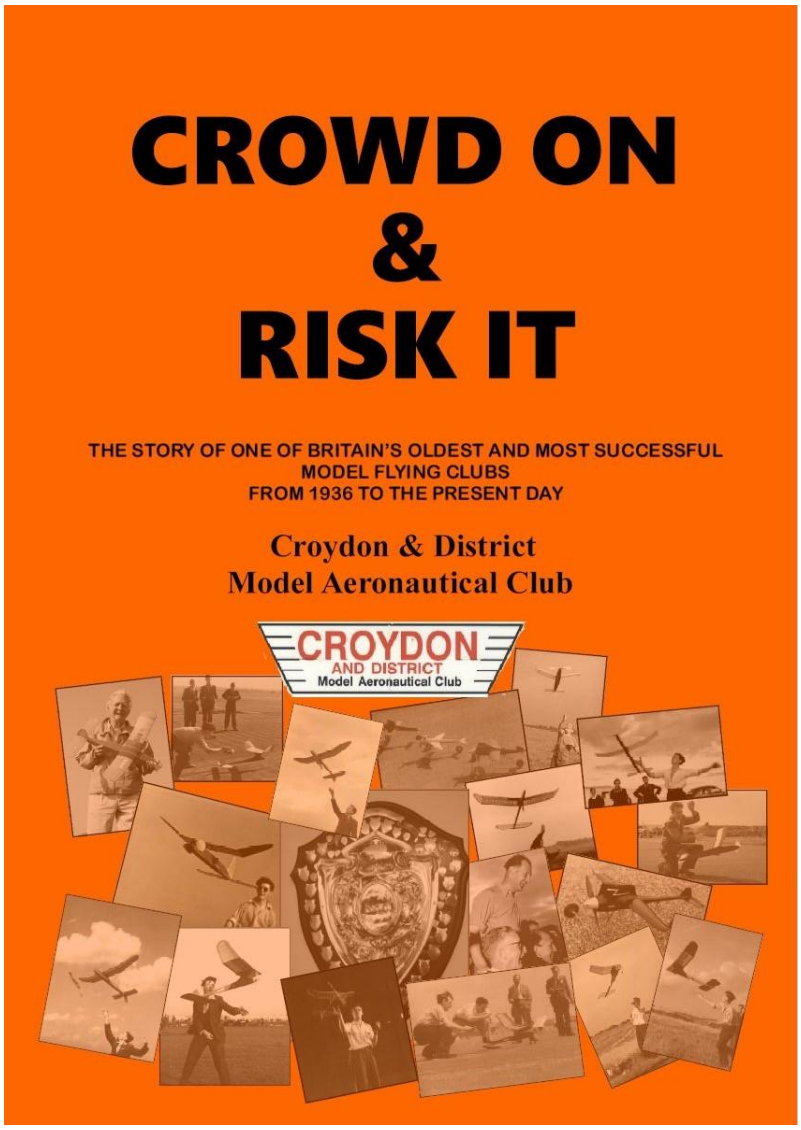

Wet and windy and cold outdoors?

Why not come and join us at Wickham for free flight for fun with no formal contests or slot allocations at our heated indoor venue: The Wickham Centre, Mill Lane, Wickham Hants PO17 5AL

We fly on the first Tues of every month except Aug and Sept, these are the remaining dates for 2016 from 6.30pm to 10pm:

1st March
5th July
5th April
4th October
3rd May
1st November
7th June
6th December

Admission: fliers; adults £4, juniors £1. Spectators; adults £1, juniors free

Please see our website for model suitability and flying etiquette:

http://www.wcaero.co.uk/site/index.php/indoor-flying

Flitehook are usually in attendance, the hall is the size of two badminton courts, proof of BMFA insurance is required so please bring your card. No large or heavy models and sorry there is no R/C allowed at our FF events, see our website for R/C indoor events.

Contact Peter Sanders 01489 895788
email jsandersstamps@aol.com

Waltham Chase Aeromodellers

See you there soon!

Control line at Wimborne MAC

10 April Sunday

9 October Sunday

Cockelebarrow

The dates for Cocklebarrow have been confirmed as 10th July; 21st August and 2nd October.

The Committee wish to acknowledge the support of the following sponsors without whom putting on this event and maintaining the field for the rest of the season may well have proved impossible :-

R & D Walker Ltd Butchers

The Moreton Charity

The Edith Mann Charitable Trust

This years event will be held on the weekend of 13th and 14th August. Format for the event will be very similar to previous years with :

- Off the peg flying both days
- Camping facilities (please contact us to book in advance)
- Saturday night BBQ
- Onsite toilets and drinking water facilities
- 200 ft grass strip for R/C flight
- Control Line Circle (depending on availability of land as we are on a working farm)
- Small field Free flight
- Bring and Buy Sale - bring along your bits that are "Surplus to Requirement" and turn them into cash

This year, as last, we will be holding TWO mass build events :-

On the Saturday we welcome pilots along to celebrate the "Cotswold Novice", the iconic Sid King Design

On Sunday it is going to be a mass collective of Vic Smeed designs.

In both events, models of any size (scaled up or down); in any version and with any power source, IC or electric, will be eligible.

For further information or to register your interest please email:-

gray@ncmac.co.uk

It goes without saying but please :-

WILL ALL PILOTS PLEASE ENSURE THAT THEY HAVE PROOF OF VALID INSURANCE WHEN BOOKING IN

INDOOR MODEL FLYING 7pm to 10pm

FREE FLIGHT ONLY

ALLENDALE CENTRE
HANHAM RD. WIMBORNE BH21 1AS
FREE CAR PARKING IN PUBLIC CAR PARK
IN ALLENDALE RD

COMPETITIONS incl GYMINNIE CRICKET & SERENE LEAGUES
ALL FLYERS MUST HAVE BMFA INSURANCE FLITEHOOK NORMALLY IN ATTENDANCE
Adult Flyers £5 Spectators £1.50

CONTACTS: JOHN TAYLOR 01202 232206

All dates are Tuesdays
22 March 2016
26 April 2016
24 May
28 June
26 July
23 August
27 September
25 October
22 November

NOTE FLYING HAS BEEN EXTENDED THROUGH THE SUMMER PERIOD

FLITEHOOK

Indoor Free Flight Meeting
West Totton Centre,
Hazel Farm Road,
Totton, Southampton.
SO40 8WU

Café on Site

Contact Flitehook
E-mail flitehook@talktalk.net
Tel. No. 02380 861541

Flyers £6, Spectators £2

Sundays 10.00a.m. to 4.00p.m.

6th March 2016

Dens Model Supplies

Traditional and Electric Control Line kits and accessories for the Sports Flyer
Exclusive UK Stockist of the range of E-Zee Timers
For Control Line – Electric Powered FF – Servo DT Only

E-Zee Timers

Black Hawk Models

stevens™ aeromodel

COX®

Merlin GLOW PLUGS

Kits and Cox 049 Engines from under £20…CL Cox 049 Starter Package £60….Electric CL Plug and Play Starter Package £80…..Glow Plugs from Merlin….hard to find CL accessories at sensible prices…..E – Zee Timers from £12

On Line shop at www.densmodelsupplies.co.uk
Or phone Den on 01983 294182 for traditional service